SHAMROCK CONTROLS

Voltage Transformer

Model 467

FREQUENCY:
60 Hz.
STANDARD SECONDARY VOLTAGE:
120 Volts
INSULATION LEVEL:
600 Volts. 10 kV BIL. full wave
ACCURACY CLASS:
± 1% at all burdens up to 5 VA at 1.0 and 0.95 P.F.
THERMAL RATING:
40 VA AT 30°c . amb, 27 VA AT 55°c. amb
APPROXIMATE WEIGHT:
2.5 lbs.
CONNECTIONS:
-Terminals are No. 6-32 screws with one lockwasher and one flat washer

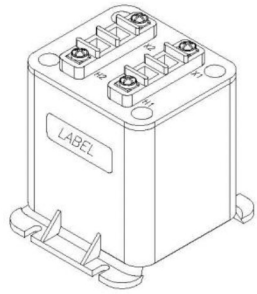

Model	467
Width	3.50
Height	3.78
Depth	2.94

CERTIFICATIONS:

c UL us
E228202

c SP us
223647

nqa. ISO 9001 Registered Quality Management

MODEL 467
Approximate weight: 2.5 lbs.

CATALOG NUMBER	VOLTAGE RATING	TURNS RATIO	REC. PRIMARY FUSE RATING
467-069	69.3:120	0.58:1	1.5
467-120	120:120	1:1	1
467-208	208:120	1.73:1	0.5
467-240	240:120	2:1	0.5
467-277	277:120	2.31:1	0.5
467-288	288:120	2.4:1	0.4
467-300	300:120	2.5:1	0.4
467-346	346:120	2.88:1	0.4
467-480*	480:120	4:1	0.25
467-600*	600:120	5:1	0.25

- The core and coil assembly is encased in a thermoplastic shell and filled with resin.
- Each transformer has a clear plastic terminal cover.
- These transformers are designed for operation line to line. They may also be operated line to ground or line to neutral at reduced voltage (58% of rated volts).
- It is desirable to use a 0.40 amp fuse in the secondary to protect the transformer.
- With two exceptions these transformers are ANSI C57.13 group 1. Those marked * are group 2.
- Models designed specifically for 50Hz operation are available with reduced performance consult factory for details.

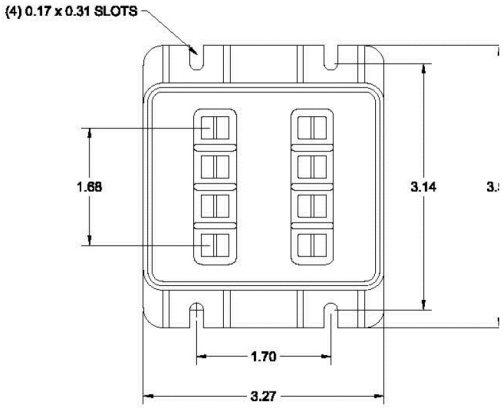

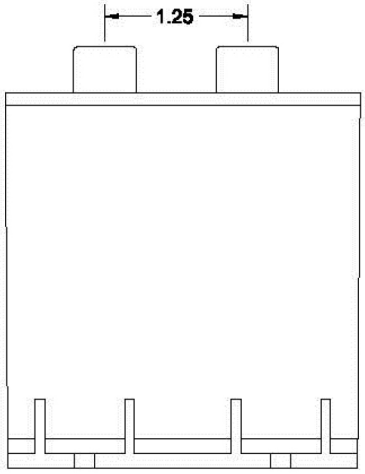

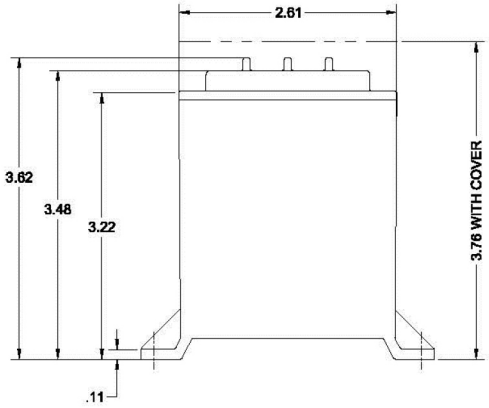

Products are manufactured in a plant whose quality management system is certified / registered as being in conformity with ISO 9001